trueheat
GAS COOKING EQUIPMENT
RC SERIES

RCSTD6

600mm WIDE STANDS

The Australian owned and designed* Trueheat RC Series of Gas Cooking Equipment has been developed for the restaurant and cafe market with a high quality finish, designed to fulfill the busy demands within a commercial kitchen.

Sturdy stands are available in 300mm, 400mm, 600mm and 900mm widths.

Castors with or without brake can be added to 600mm and 900mm stands only. Stands fitted with castors will need to be cut down by 120-150mm.

DIMENSIONS & WEIGHT	
Working height : 910mm (+/-15mm with stand)	
External Dimension: 600W x 683D x 680H mm	
Net Weight: 11kg	
SHIPPING DATA	
Shipping Dimensions: 660W x 740D x 170H mm	
Shipping Weight: 13.5kg	
OPTIONAL ACCESSORIES	
Part Number:	Description:
MS-CSTRB	Castor with brake to suit both 600mm and 900mm
MS-CSTR	Castor without brake to suit both 600mm and 900mm

SPECIFICATIONS ARE SUBJECT TO CHANGE WITHOUT NOTICE.

*manufactured in China

FOR THE BEST PRICE CONTACT WHOLESALER
PHONE: 1300 131 700
VISIT: WWW.ONESTOPWHOLESALER.COM
ONE STOP

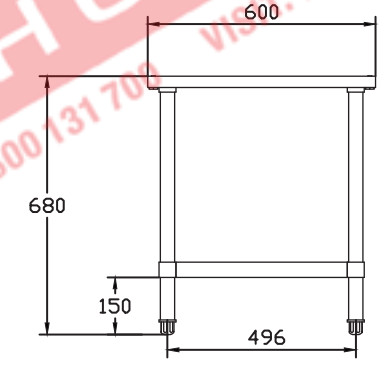

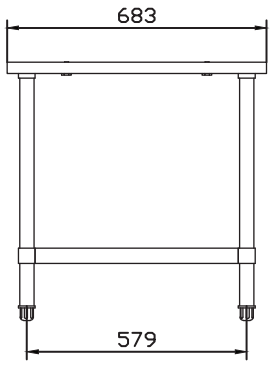

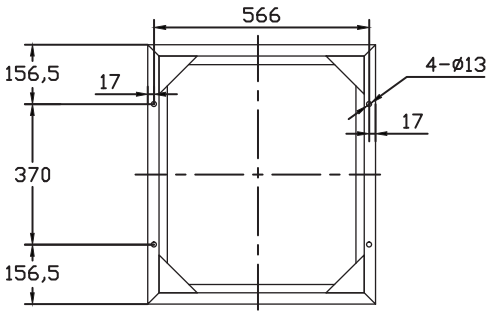

COMCATER · foodservice equipment

National Head Office
156 Swann Drive
Derrimut VIC 3026
Tel: +61 3 8369 4600
Fax: +61 3 8369 4699
www.comcater.com.au

Melbourne
96-100 Tope Street
South Melbourne VIC 3205
Tel: +61 3 8699 1200
Fax: +61 3 8699 1299

Sydney
20/4 Avenue of the Americas
Newington, NSW 2127
Tel: +61 2 8775 9500
Fax: +61 2 9648 4762

Brisbane
1/62 Borthwick Avenue
Murarrie QLD 4172
Tel: +61 7 3900 2700
Fax: +61 7 3399 5311

Perth
Unit 16, 7 Abrams Street
Balcatta, WA 6021
Tel: +61 8 6217 0700
Fax: +61 8 6217 0799