robot coupe®

Blixer® 23 • Blixer® 30
Blixer® 45 • Blixer® 60

ONE STOP WHOLESALER
FOR THE BEST PRICE
PHONE: 1300 131 700
VISIT: WWW.ONESTOPWHOLESALER.COM

HOSPITALS - NURSING HOMES - CRÈCHES - RESTAURANTS

Blixer® 23 • 30 • 45 • 60

Lid

- **Transparent polycarbonate** lid to enable user to monitor processing.
- **Watertight** lid requiring a single movement to lock it into position.
- Lid specially designed to direct liquid back into processing bowl when opened.
- **Opening in centre of lid** for adding liquid or dry ingredients during processing.
- **Lid and seal designed to be dismantled** simply and quickly for thorough cleaning.

Control panel

- 0-15 minute **timer**. When the appliance is used, it automatically repeats the processing time selected on the previous occasion, unless the user sets a different one.
- **Stainless-steel control buttons flush with the casing**, making them easier to clean and longer lasting.
- **Safety indicator lights** to ensure risk-free use.
- **Pulse control** for greater cutting precision.

Bowl scraper

- To improve the turbulence and consequently the end-product consistency.

Tilting lever

- Ergonomic lever enabling the user to tilt the bowl at various angles, even horizontally.

Bowl-base blade assembly

- Exclusive to Robot-Coupe, ensuring total homogeneity of processed foodstuffs, even when small amounts are involved.

Bowl

- **Tilting bowl** making it easier to empty.
- **Removable bowl,** exclusive to Robot-Coupe, for hassle-free cleaning

Frame

- 100% stainless-steel with system of 3 sturdy built-in legs :
  - ensuring total stability of the appliance and risk-free use,
  - taking up very little space,
  - making cleaning easier.

Wheels

- **3 retractable wheels** making it easier to move the appliance in order to clean the surface underneath.

FOR THE BEST PRICE CONTACT
WHOLESALER
PHONE: 1300 131 700 VISIT: WWW.ONESTOPWHOLESALER.COM
ONE STOP

THE BLIXER®

The Products Plus :

2 functions in 1 !

- The Blixers combine the features of two well-known appliances: the cutter and the blender/mixer.
  The Blixers will easily realise your mixed, raw or cooked, liquid, semi-liquid or pasty meals.

Efficacity:

- With their large liquid capacity and leak proof lid, with built in scraper, these models make it simple to prepare all types of mixed and liquidized food, even for tube feeding.

Ease of use:

- All stainless steel machine for space saving, built with a removable bowl and tilting seal for easier cleaning and to empty the bowl easily.
- Control panel designed for a simple and reliable use, and equipped with a timer for a better preparation control.

Number of covers:

from 100 to 3000 +

Quantities processed by operation:

from 4 to 45 kg

Target:

Hospitals, Nursing homes, Crèches, Restaurants

In brief:

Blixers are quick, efficient, simple to use and robust. Add to this guarantee of a perfectly finished end product that contains all the goodness and flavour of the pre-liquidized food.

EXAMPLES OF USE

HOSPITAL USES

SPOON FEEDING

- Minced foods: meat, fish, etc.
- Mousses: vegetables, fish, etc.
- Vegetables purees
- Compotes of stewed fruits.

SEMI-LIQUID FEEDING

This simply entails diluting spoon-feeding preparations:

- soups / creamed soups
- minced meat + gravy
- puree + liquid (broth, milk, etc.)
- fruits compotes + syrup or water

LIQUID FEEDING
(for use via tubes)

- Soups and any preparations that can be liquidized.

DELICATESSENS USES

- **Butter mixtures:** snail butter, salmon butter, anchovie butter…
- **Sauces:** green sauce, mayonnaise, remoulade, ailloli, emulsified sauces with tomatoes, cream, parsley...
- **Vegetable mousses.**
- **Grinding:** lobster, scampi, seashells...

PHARMACEUTICAL AND CHEMICAL LABORATORY USES

- **Grinding:** herbs, seeds, powders, tablets...
- **Mixing:** homogeneization of creams, ointments, mixed components, varied ingredients...

FOR THE BEST PRICE CONTACT
ONESTOPWHOLESALER
PHONE: 1800 431 700 VISIT: WWW.ONESTOPWHOLESALER.COM

Models	Blixer 23	Blixer 30	Blixer 45	Blixer 60
Bowl capacity (in litres)	23	28	45	60
Speeds (Rpm)	1500 to 3000	1500 to 3000	1500 to 3000	1500 to 3000
Timer	●	●	●	●
No. of servings	100 to 400 +	100 to 500 +	200 to 1000 +	300 to 3000 +
Maximum quantities processed	4 to 15 kg	4 to 20 kg	6 to 30 kg	6 to 45 kg

BLADES

In order to guarantee perfect results every time, Robot-Coupe has developed **new patented blade profiles** providing optimum cutting quality. **Perfectly balanced** to prevent any vibration, these blades are available with three different types of edge.

Fine serrated edge for all blending tasks, as well as for homogeneous and smooth-textured preparations.

Delivered with a **fine serrated 2-blade** assembly

To obtain the best results, it is important to get the spacing between the blades right and to take into account the maximum processing capacities (see table).

robot coupe®

Blixer® 23 • Blixer® 30
Blixer® 45 • Blixer® 60

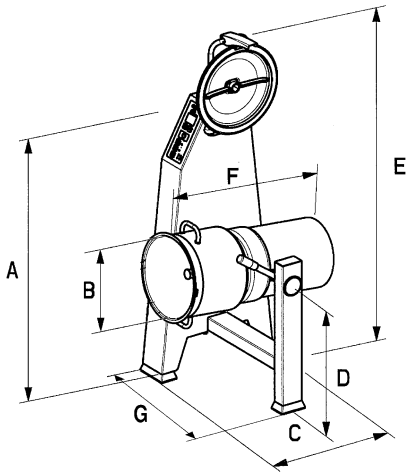

Dimensions (in mm)

	23	30	45	60
A	1250	1250	1400	1400
B	320	360	400	450
C	600	600	600	600
D	590	590	640	640
E	1620	1620	1800	1820
F	800	800	870	870
G	700	720	760	810

CE Mark

Electrical data

Speeds 1500 - 3000 Rpm
400 V/50 Hz • Three-phase
Blixer 23 : 4500 W - 18 Amp.
Blixer 30 : 5400 W - 18 Amp.
Blixer 45 : 9000 W - 24 Amp.
Blixer 60 : 11 000 W - 35 Amp.

Other voltages available.

Weight

Blixer 23 : Net 110 kg - Gross131 kg
Blixer 30 : Net 110 kg - Gross131 kg
Blixer 45 : Net 138 kg - Gross 165 kg
Blixer 60 : Net 150 kg - Gross 177 kg

As inventors and market leaders, Robot-Coupe offers the most complete range of Blixers®, a choice of models with capacities ranging from 2.9 litres to 60 litres.

STANDARDS: MACHINES IN COMPLIANCE WITH:

- The following European directives and related national legislation: 2006/42/EC, 2006/95/EEC, 2004/108/EC, 89/109/EEC, 2002/72/EC.
- The following European harmonized standards and standards setting out health and safety rules: EN ISO 12100 - 1 and 2 - 2003, EN 60204 -1 (2006), EN 12853.

INDEXES OF PROTECTION: • IP 55 for the switches. • IP 34 for the machines.

MADE IN FRANCE BY ROBOT-COUPE S.N.C.

Head Office, French, Export and Marketing Department:
Tel.: + 33 1 43 98 88 33 - Fax: + 33 1 43 74 36 26
email: international@robot-coupe.com

Robot-Coupe Australia: T (02) 9478 0300 - F (02) 9460 7972
email: orders@robotcoupe.com.au

Robot-Coupe U.K. LTD: Tel.: 020 8232 1800 - Fax : 020 8568 4966
2, Fleming Way, Isleworth, Middlesex TW7 6EU
email: sales@robotcoupe.co.uk

Robot-Coupe U.S.A.: Ph.: 1-800-824-1646 - Fax : 601-898-9134
email: info@robotcoupeusa.com

www.robot-coupe.com

DISTRIBUTOR

Réf. 430 243 - 03/2010 - Anglais

We reserve the right to alter at any time without notice the technical specifications of this appliance. None of the information contained in this document is of a contractual nature. Modifications may be made at any time.
© All rights reserved for all countries by : ROBOT-COUPE S.N.C.

FOR THE BEST PRICE CONTACT
WHOLESALER
PHONE: 1300 11 1700
VISIT: WWW.ONESTOPWHOLESALER.COM